A & M Electric Tools

Ind	Product No.	Type	Voltage	Country
a	4000403461	EX150E	220-240V	IN2
b	4000403471	EX150E	220-240V	GB2

Orbital Sanders

AEG

EX 150 E

Exp.view No.	Version	Date	Page
4926 4034 62	0001	31.05.07	1/1

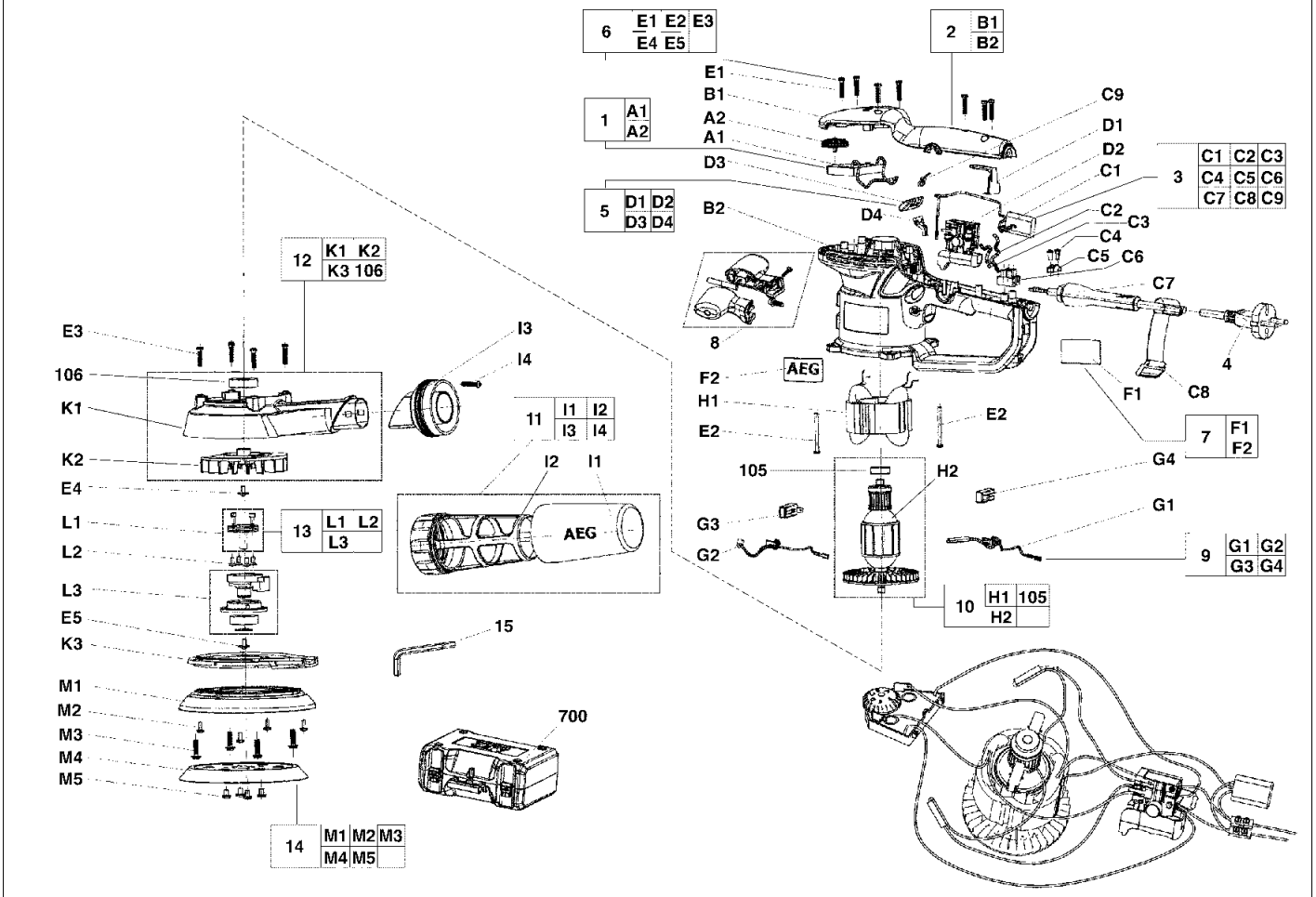

Pos	Index	Quanti	Article No.	Designation
0001	a.....	1	200372002	ELECTRONIC
0002	a.....	1	201110001	HOUSING
0003	a.....	1	201115001	CAPACITOR
0004	a.....	1	200311002	CONNECTION CABLE
0005	a.....	1	200399005	SWITCH BUTTON
0006	a.....	1	200288039	SCREW
0007	a.....	1	201111001	LABEL
0008	a.....	1	200407002	HANDLE
0009	a.....	1	200278008	CARBON BRUSH SET
0010	a.....	1	001281001	MOTOR ASSEMBLY
0011	a.....	1	200162005	KIT
0012	a.....	1	200462004	DUST CAP
0013	a.....	1	200315003	SHAFT
0014	a.....	1	200508002	PAD
0015	a.....	1	201107001	ALLEN KEY
0105	a.....	1	201108001	BALL BEARING
0106	a.....	1	201108002	BALL BEARING
0700	a.....	1	000186024	CARRYING CASE

Pos	Index	Quanti	Article No.	Designation

Repairs/modification and and testing of electric power tools are to be carried out by specialists. The safety regulations according to DIN/VDE/CEE/AFNOR and other regulations valid in the different countries are to be observed.